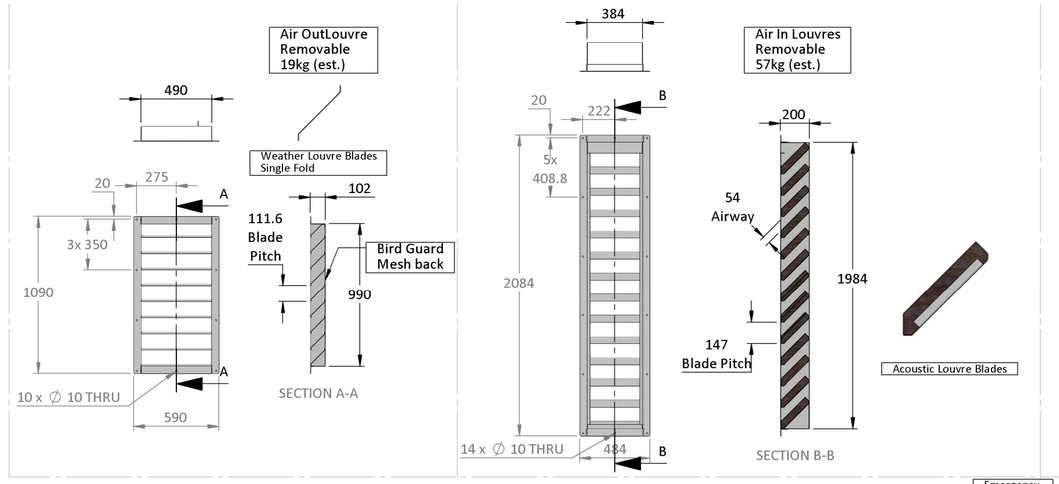

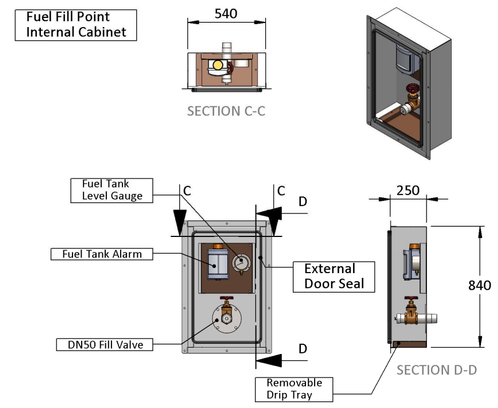

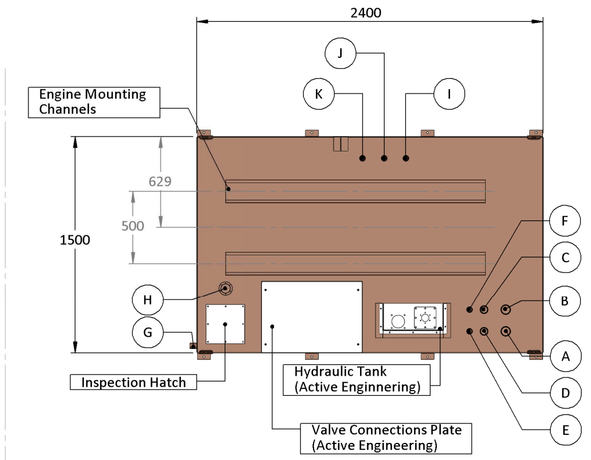

A	2" BSP	Fill Connection
B	2" BSP	Vent
C	1½" BSP	High Level Float
D	1½" BSP	Low Level Float
E	1" BSP	Hydrostatic Gauge
F	1" BSP	Spare
G	1" BSP	Drainage
H	64mm	Contents Gauge
I	1" BSP	Engine Fuel Feed
J	1" BSP	Engine Fuel Return
K	1" BSP	Spare

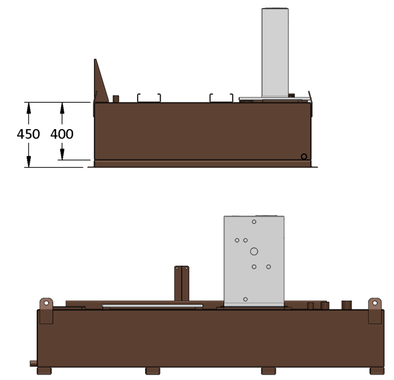

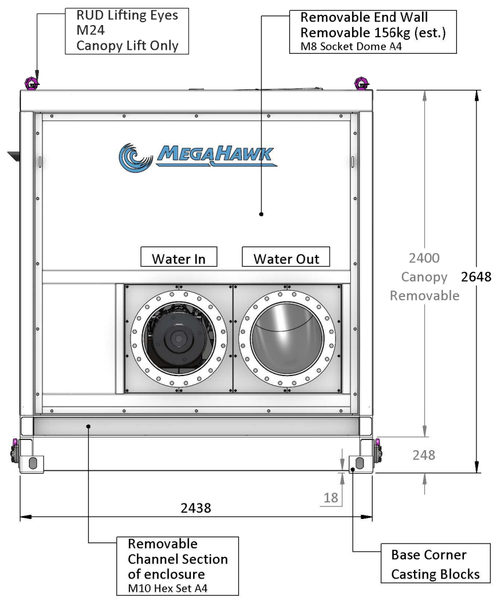

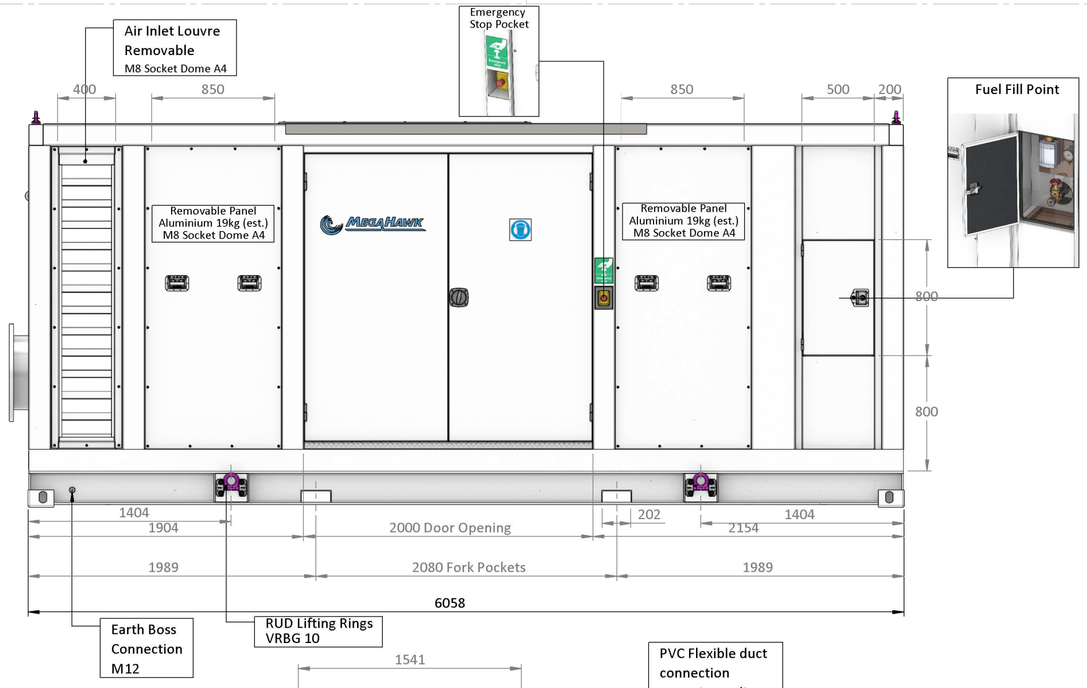

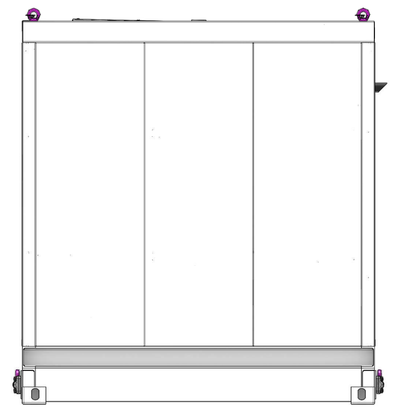

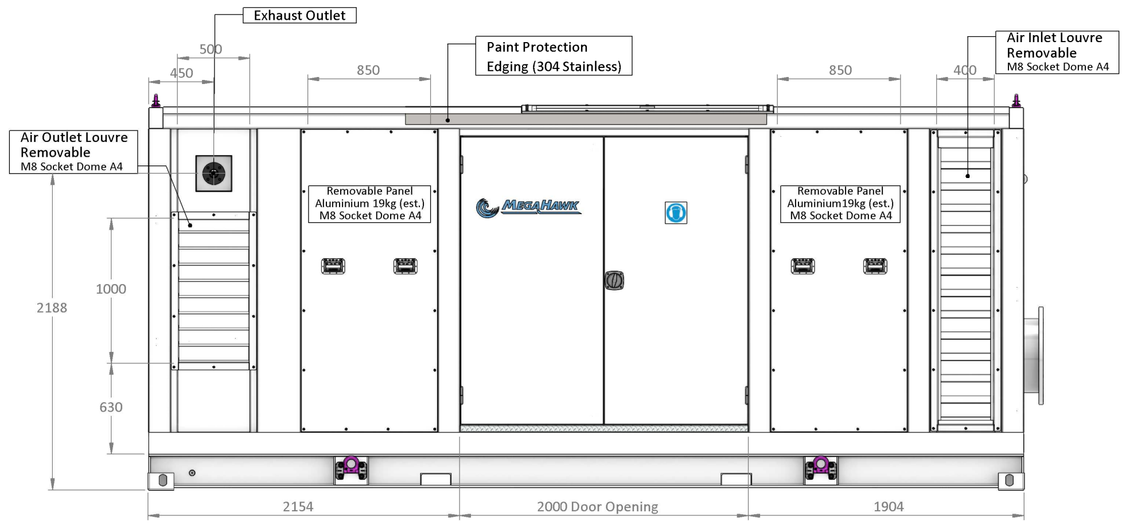

Production No.	AS 14/096
Customer Ref.	
Design Ref.	14096
Quantity	1
Engine Model	JCB IPU 129kw TA4i 12V 12 EU
Noise Level	75dbA @ 8m
Paint Spec	C5-M
Colour (External)	RAL 9010 (Pure White)
Colour (Internal)	RAL 9010 (Pure White)
Acoustic Infill	RS60 / RW3

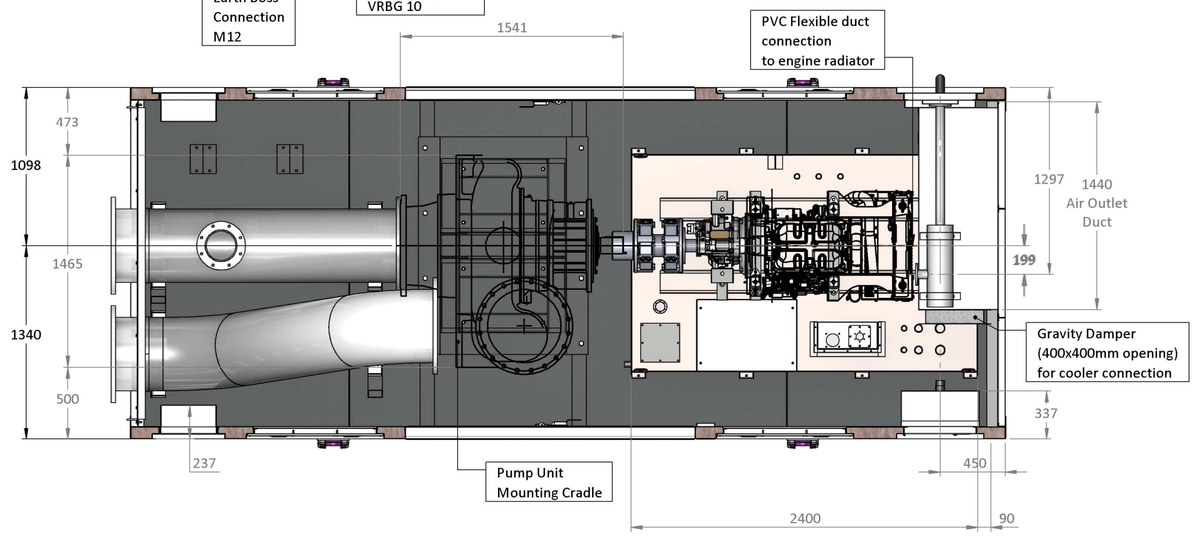

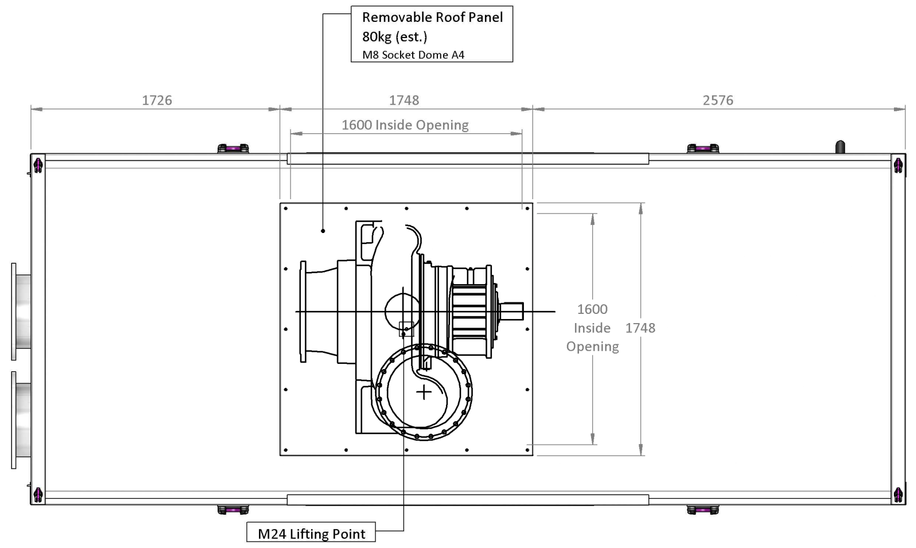

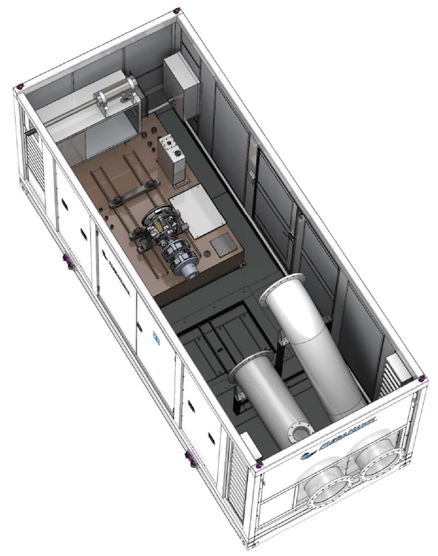

THIRD ANGLE PROJECTION

Estimated Weights	
Base Assembly	1970.00KG
Fuel Tank (Dry)	564.00KG
Canopy Assembly (Complete)	2589.00KG
Total	5129.00KG

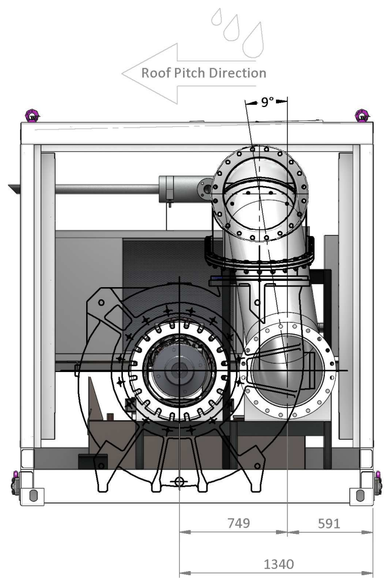

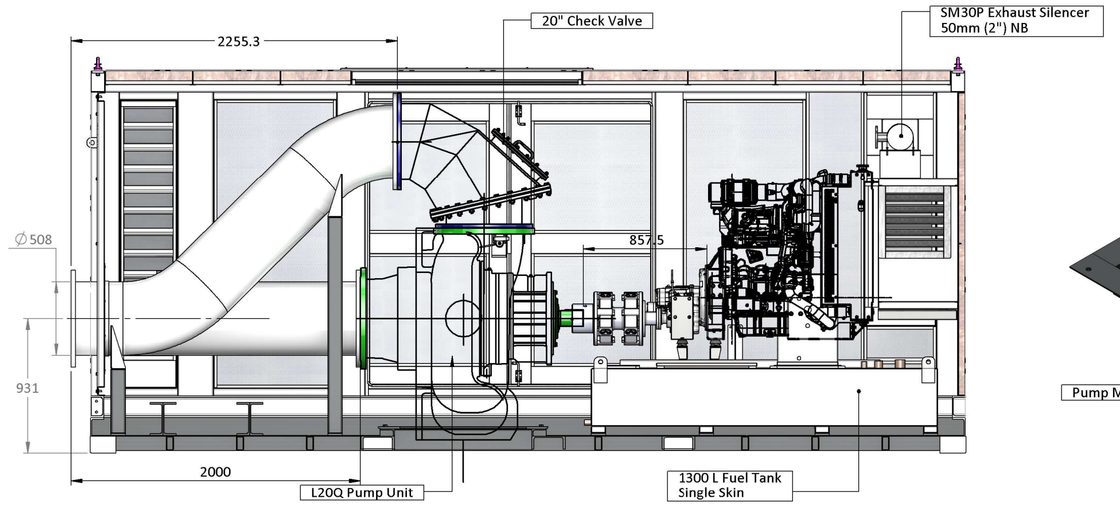

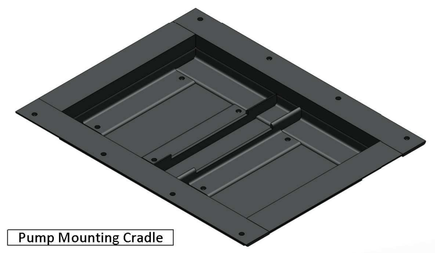

REVISION	DATE	04/11/2014
C	APP'D	KM
	DOCN.	
REVISION	DATE	10/10/2014
B	APP'D	KM
	DOCN.	
REVISION	DATE	03/10/2014
A	APP'D	KM
	DOCN.	

Drawing No.	14096-01-01
Drawn By	KM
Date Drawn	12/09/2014
Sheet Scale	1:30 @ A1

HIDROSTAL
20" MEGAHAWK

G&M ACOUSTIC SOLUTIONS
259 Greenstead Road
Colchester, Essex, CO1 2SF

Tel: +44(0)1206 790 754
Fax: +44(0)1206 794 863
www.gmpp.co.uk

© G&M ACOUSTIC SOLUTIONS
The copyright in this drawing is owned by G&M Acoustics. It may not be published or reproduced in any material form without the express written consent of the Company.